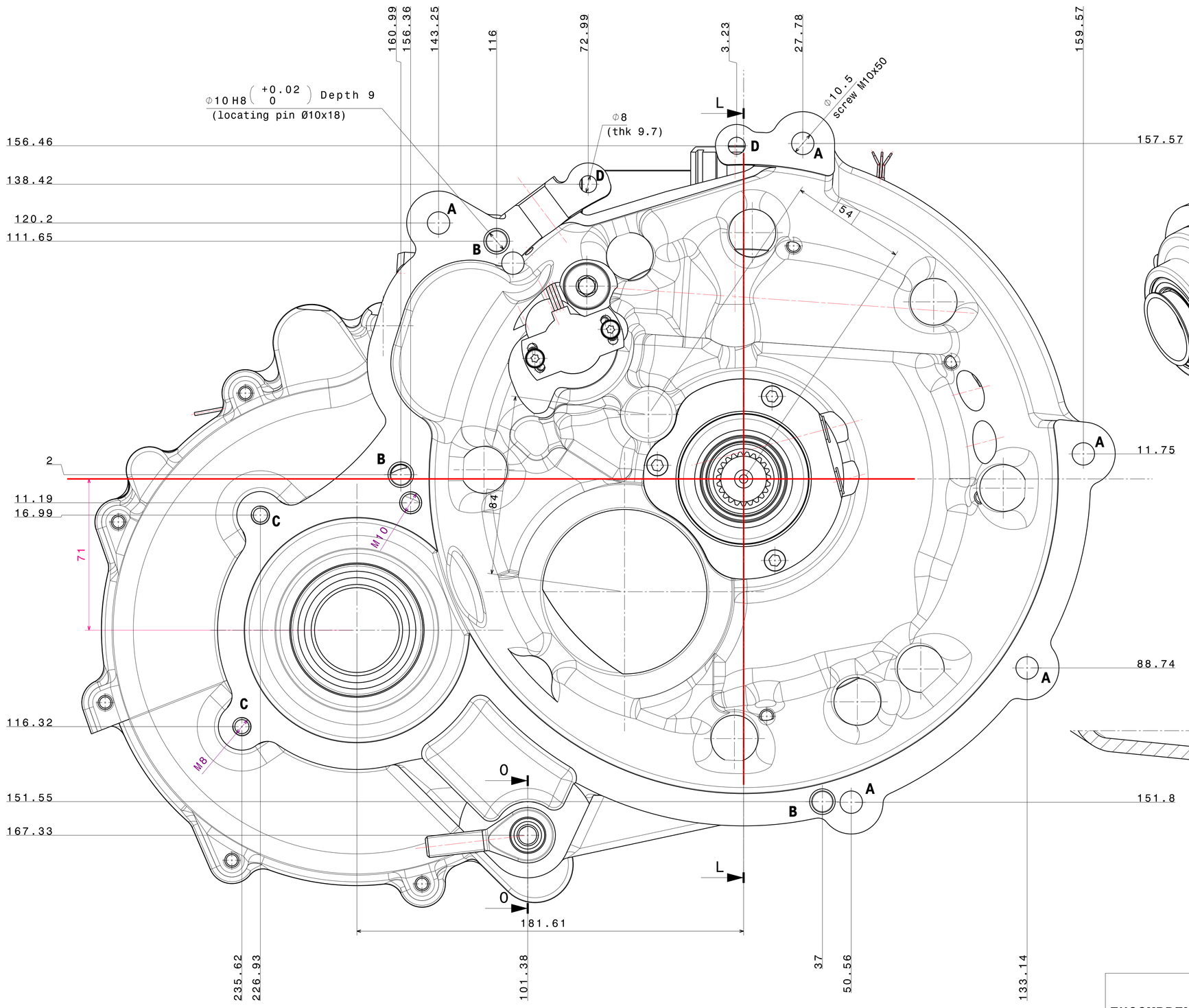

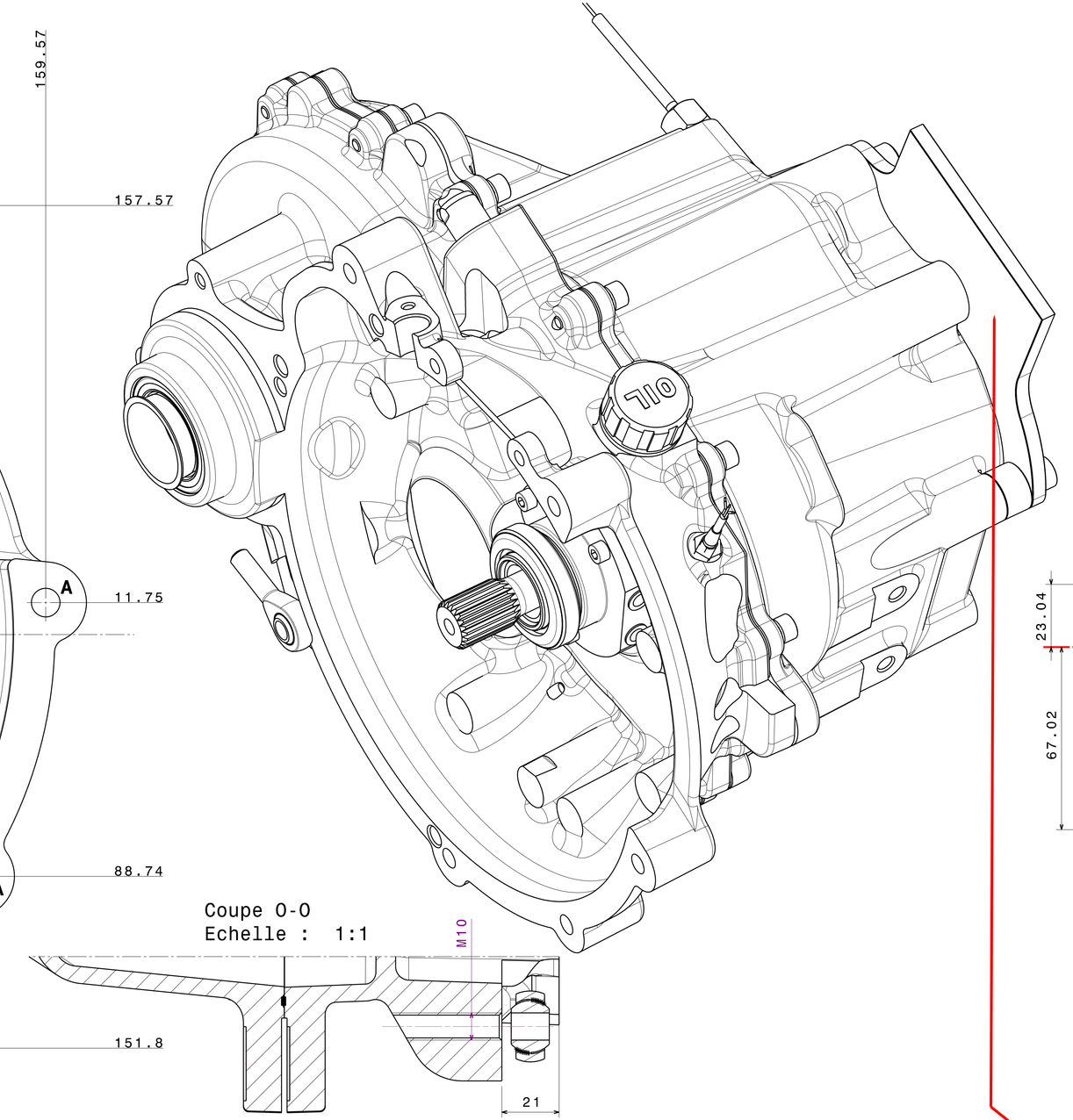

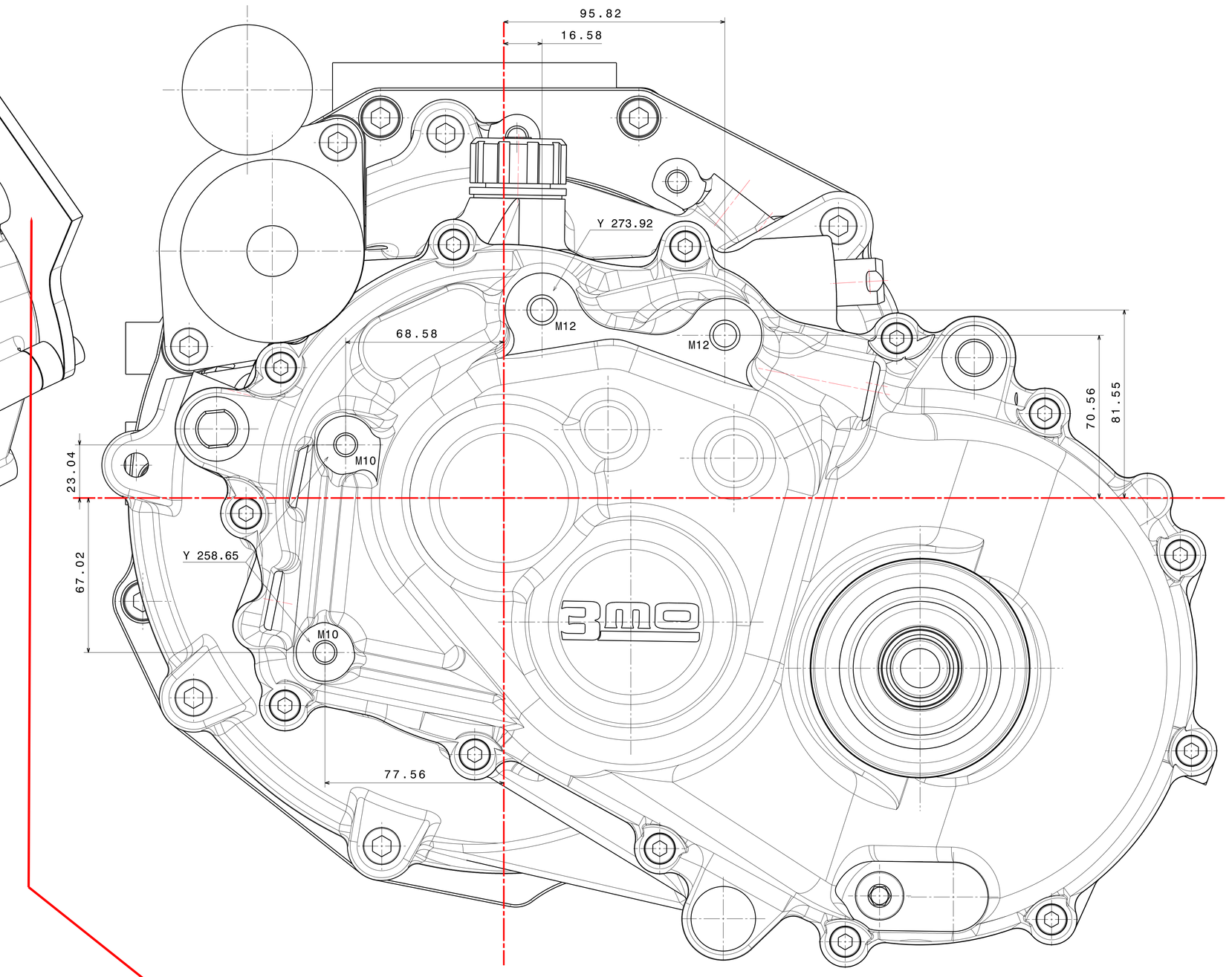

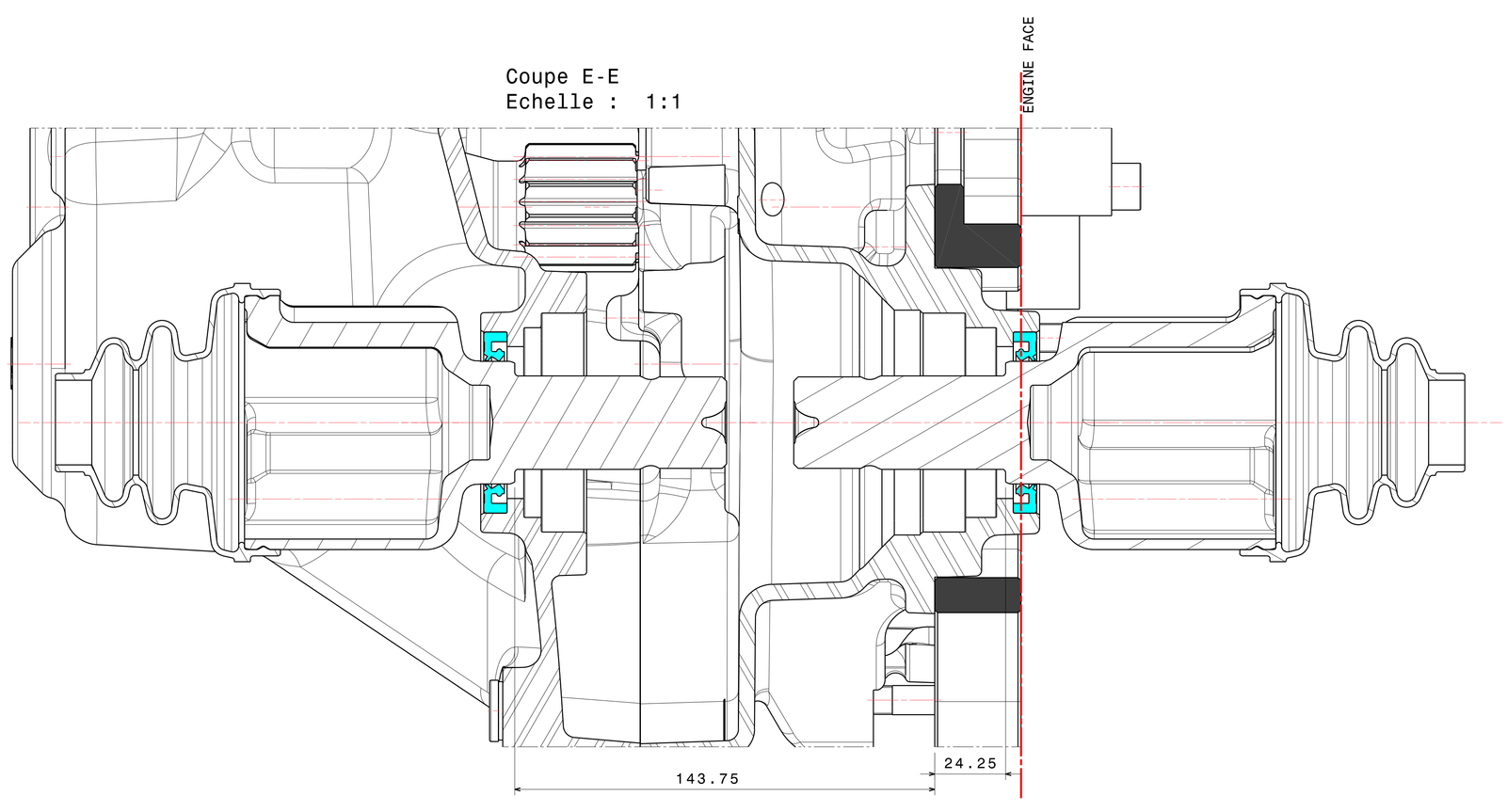

LC776

ENCOMBREMENT MAXI VOLANT ET SYSTEME EMBRAYAGE / MAXIMUM SIZE OF FLYWHEEL AND CLUTCH

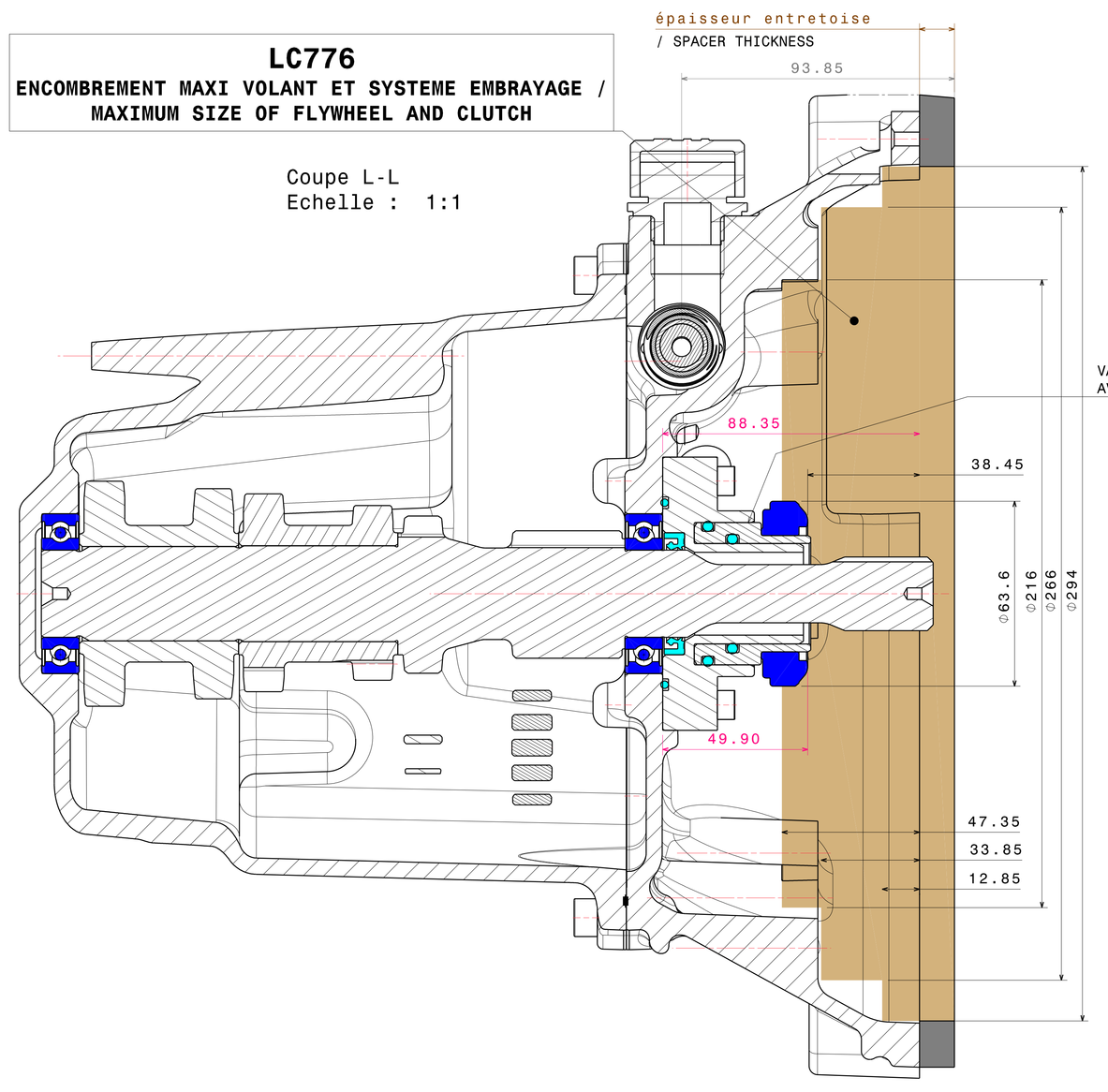

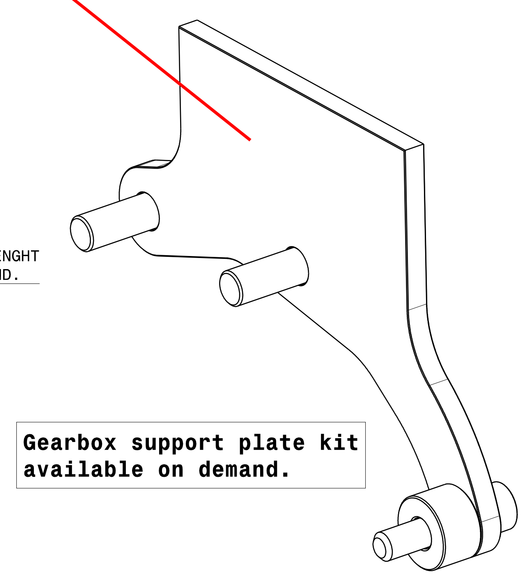

Gearbox support plate kit available on demand.

ZA Les Bozées, Rue de BRUXELLES
53000 LAVAL Tel :0243532939
Fax :0243566020

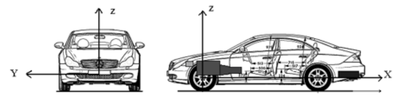

LC776 : INFORMATIONS FOR CLUTCH SPACER SELF DESIGN.