CORSA RALLY 4

SET-UP - MONTE CARLO (2021)

Tarmac(+) Dry & Wet / Ice (-)

Version: **2025-A**

		unit.	FRONT Left	FRONT Right	REAR Left	REAR Right	Comments:
	TYRES	Dimensions	MW1		MW1		Reference = Michelin
	TYRE PRESSURE for set up	bar	2.0		2.0		*New tyres for RH's reference*
GEOMETRY	RIDE HEIGHT (RH)	mm	245		410		*RH's Target recommended (Measurement points end of page)*
	Theoretical cup heights (CH)	mm	120 ≤ x ≤ 125		65 ≤ x ≤ 70		
	FRONT: 6 cup height rotation = 10mm of RH						
	REAR: 5 cup height rotation = 10mm of RH						
	CAMBER	° '	-1°45	-1°45	-1°35	-1°35	
	*Theorical camber shims **	mm	7,0	7,0	7	7	** Thickness may vary from vehicle to an other*
	FRONT: 0.1mm of shim = 0°07' to the wheel						
	REAR: 1 shim step = 0°07' to the wheel						
	TOE	mm	0,0	0,0	0,0	0,0	
	*Theorical TOE Shims **	N°			C	C	** Thickness may vary from vehicle to an other*
	FRONT: 1/2 of rod rotation = 0.75mm of Rod length = 2.0mm toe to the wheel.						
	Camber/ Toe incidence: - 0°30' of camber variation = + 2.0mm toe to the wheel.						
	REAR: 1 Shim step = 1mm to the wheel						
	Camber/ Toe incidence: - 0°07' of camber variation = - 0.4 mm toe at the wheel						
	Wheelbase	mm	2553 (+/-10)				*Homologated value*

SUSPENSION	Minimum weight	Kg	W/o crew	1080			With Crew	1240			*Category RC4 values*
	WHISHBONE	E1 Position	Low								*Low position = Mandatory*
	MAIN SPRINGS	N/mm	45				40,5				
	Helper springs	N/mm	5				5				
	DAMPERS Setting (clicks)	Version	FT011				RT022				
		Ways	c	C	R	PDS	c	C	R	PDS	*Fully screw out of the number of clicks indicated*
		Clicks	33	38	32	2	15	28	20	2	
	c= low speed compression / C= high speed compression / R= Rebound/ PDS= Progressive damping System (hydraulic)										
	ANTIROLL BAR	mm	Ø	15			Ø	22			
	ARB rod length	mm		*80*				*80*			

STEER	Steering rack height	mm	10,0	10,0	*Recommended default Shims heights*
	M-POINT SPACER (HA)	mm	*5,0*	*5,0*	
	M-POINT SPACER (BA)	mm	*1,0*	*1,0*	
	Steering Pump nozzle	mm	Ø	4 mm	

BRAKES	Main master cylinder	mm	Ø 22,22			
	BRAKE PADS	Brand/model	TM / Mix 2		TM / Mix 2	
	BRAKE BALANCE	bar	30		20	
	Handbrake MC	mm			Ø	15mm

TRANS	Gearbox Ratio	Gears	1	2	3	4	5	Final drive
		EVO Ratio	12x29	17x31	17x25	22x26	21x20	12x54
	DIFFERENTIAL	Friction Faces	12 F	Ramps (°)	27/57	Preload	120 N.m	*Hot*

FLUID

Recommendations

	Type	Reference	Volume
Engine Oil :	0 W 30	PS97727A10	3.5 L (+1.5 L radia)
GearBox Oil :	75 W 140	904895438A	1 L (+0.1 L radia)
Steering Fluid :	LDS	1615099680	2 L
Coolant :	PSA -35°C	1637756480	6.5 L
Brake / Clutch Fluid :	BREMBO HTC64	PS97633A10	

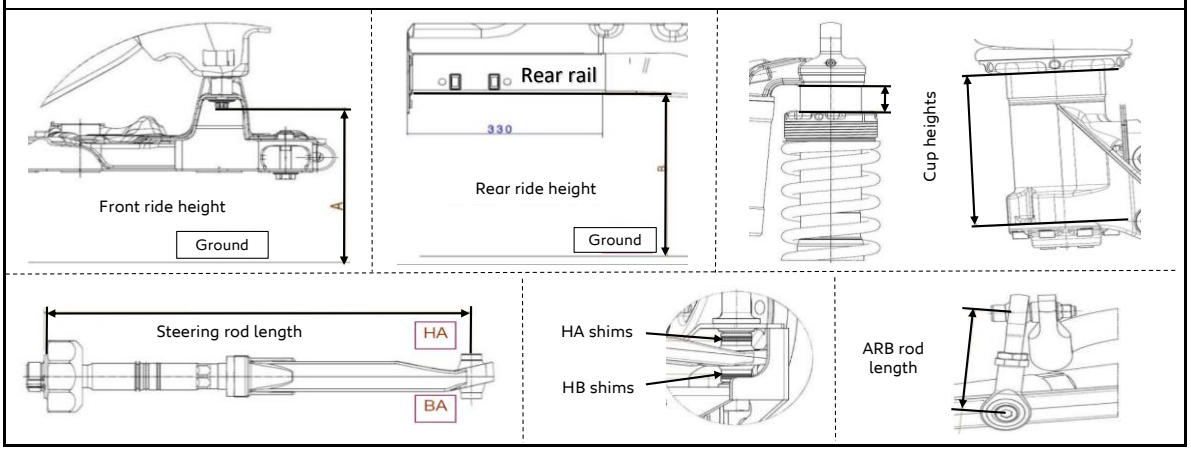

SET-UP - MONTE CARLO (2021)

Tarmac (-) / Ice (+)

Version: **2025-A**

		unit.	FRONT		REAR		Comments:
			Left	Right	Left	Right	
	TYRES	Dimensions	16/61-15 NA01 Studded		16/61-15 NA01 Studded		Reference = Michelin
	TYRE PRESSURE for set up	bar	2.0		2.0		*New tyres for RH's reference*

GEOMETRY	**RIDE HEIGHT (RH)**	mm	255		420		*RH's Target recommended (Measurement points end of page)*
	Theoretical cup heights (CH)	mm	130 ≤ x ≤ 135		75 ≤ x ≤ 80		
	*FRONT: **6** cup height rotation = **10mm** of RH*						
	*REAR: **5** cup height rotation = **10mm** of RH*						
	CAMBER	° '	-2°15	-2°15	-2°	-2°	
	*Theorical camber shims **	mm	6,4	6,4	10	10	** Thickness may vary from vehicle to an other*
	*FRONT: **0.1mm** of shim = **0°07'** to the wheel*						
	*REAR: **1** shim step = **0°07'** to the wheel*						
	TOE	mm	0,0	0,0	0,0	0,0	
	*Theorical TOE Shims **	N°			B	B	** Thickness may vary from vehicle to an other*
	*FRONT: **1/2** of rod rotation = 0.75mm of Rod length = **2.0mm** toe to the wheel.*						
	*Camber/ Toe incidence: **- 0°30'** of camber variation = **+ 2.0mm** toe to the wheel.*						
	*REAR: **1** Shim step = **1mm** to the wheel*						
	*Camber/ Toe incidence: **- 0°07'** of camber variation = **- 0.4 mm** toe at the wheel*						
	Wheelbase	mm	2553 (+/-10)				*Homologated value*

SUSPENSION	Minimum weight	Kg	W/o crew		1080		With Crew		1240		*Category RC4 values*
	WHISHBONE	E1 Position	Low								*Low position = Mandatory*
	MAIN SPRINGS	N/mm	40				36				
	Helper springs	N/mm	5				5				
	DAMPERS Setting (clicks)	Version	FT011				RT022				*Fully screw out of the number of clicks indicated*
		Ways	c	C	D	PDS	c	C	D	PDS	
		Clicks	35	38	35	2	15	28	23	2	
	c= low speed compression / **C**= high speed compression / **R**= Rebound/ **PDS**= Progressive damping System (hydraulic)										
	ANTIROLL BAR	mm	Ø	15			Ø	22			
	ARB rod length	mm		*80*				*80*			

STEER	Steering rack height	mm	10,0	10,0	*Recommended default Shims heights*
	M-POINT SPACER (HA)	mm	*5,0*	*5,0*	
	M-POINT SPACER (BA)	mm	*1,0*	*1,0*	
	Steering Pump nozzle	mm	Ø	4 mm	

BRAKES	Main master cylinder	mm	Ø 22,22			
	BRAKE PADS	Brand/model	TM / Mix 2		TM / Mix 2	
	BRAKE BALANCE	bar	30		20	
	Handbrake MC	mm			Ø	15mm

TRANS	Gearbox Ratio	Gears	1	2	3	4	5	Final drive
		EVO Ratio	12x29	17x31	17x25	22x26	21x20	12x54
	DIFFERENTIAL	Friction Faces	**12 F**	Ramps (°)	**27/57**	Preload	**120 N.m**	*Hot*

FLUID

Recommendations

	Type	Reference	Volume
Engine Oil :	0 W 30	PS97727A10	3.5 L (+1.5 L radia)
GearBox Oil :	75 W 140	904895438A	1 L (+0.1 L radia)
Steering Fluid :	LDS	1615099680	2 L
Coolant :	PSA -35°C	1637756480	6.5 L
Brake / Clutch Fluid :	BREMBO HTC64	PS97633A10	

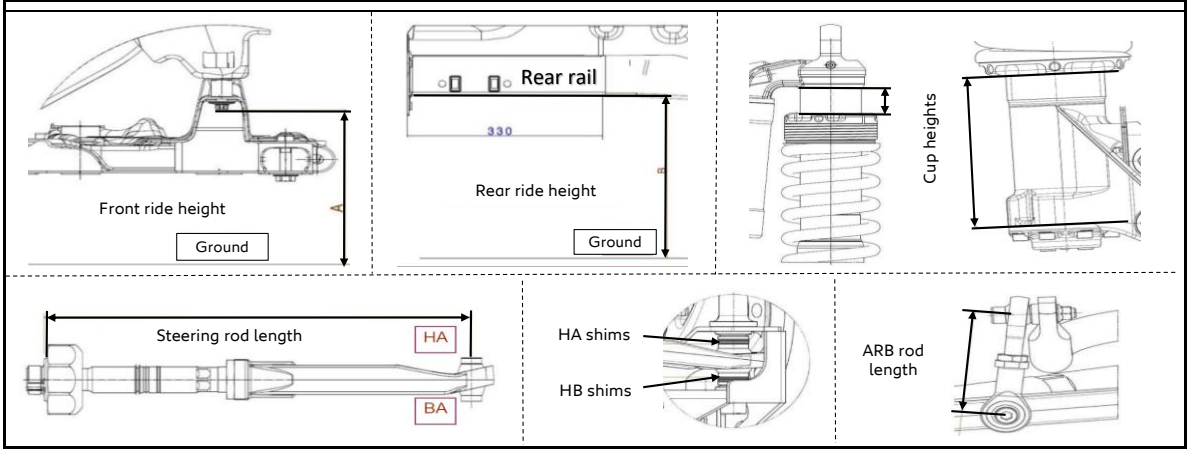

SET-UP - MONTE CARLO (2021)

Packed Snow / Ice

Version: **2025-A**

		unit.	FRONT Left	FRONT Right	REAR Left	REAR Right	Comments:
	TYRES	Dimensions	16/61-15 NA01 studded		16/61-15 NA01 studded		Reference = Michelin
	TYRE PRESSURE for set up	bar	2.0		2.0		*New tyres for RH's reference*
GEOMETRY	RIDE HEIGHT (RH)	mm	265		430		*RH's Target recommended (Measurement points end of page)*
	Theoretical cup heights (CH)	mm	*140* ≤ x ≤ *125*		85 ≤ x ≤ 90		
	*FRONT: **6** cup height rotation = **10mm** of RH*						
	*REAR: **5** cup height rotation = **10mm** of RH*						
	CAMBER	° '	-1°45	-1°45	-1°35	-1°35	
	*Theorical camber shims **	mm	*7,0*	*7,0*	*7*	*7*	** Thickness may vary from vehicle to an other*
	*FRONT: **0.1mm** of shim = **0°07'** to the wheel*						
	*REAR: **1** shim step = **0°07'** to the wheel*						
	TOE	mm	0,0	0,0	0,0	0,0	
	*Theorical TOE Shims **	N°			C	C	** Thickness may vary from vehicle to an other*
	*FRONT: **1/2** of rod rotation = 0.75mm of Rod length = **2.0mm** toe to the wheel.*						
	*Camber/ Toe incidence: **- 0°30'** of camber variation = **+ 2.0mm** toe to the wheel.*						
	*REAR: **1** Shim step = **1mm** to the wheel*						
	*Camber/ Toe incidence: **- 0°07'** of camber variation = **- 0.4 mm** toe at the wheel*						
	Wheelbase	mm	2553 (+/-10)				*Homologated value*

SUSPENSION	Minimum weight	Kg	W/o crew	1080			With Crew	1240			*Category RC4 values*
	WHISHBONE	E1 Position	Low								*Low position = Mandatory*
	MAIN SPRINGS	N/mm	35,5				32				
	Helper springs	N/mm	5				5				
	DAMPERS Setting (clicks)	Version	FT011				RT022				
		Ways	c	C	D	PDS	c	C	D	PDS	*Fully screw out of the number of clicks indicated*
		Clicks	40	43	41	2	25	32	29	2	
	c= low speed compression / **C**= high speed compression / **R**= Rebound/ **PDS**= Progressive damping System (hydraulic)										
	ANTIROLL BAR	mm	Ø	Disconnected			Ø	19			
	ARB rod length	mm		*80*				*80*			

STEER	Steering rack height	mm	10,0	10,0	*Recommended default Shims heights*
	M-POINT SPACER (HA)	mm	*5,0*	*5,0*	
	M-POINT SPACER (BA)	mm	*1,0*	*1,0*	
	Steering Pump nozzle	mm	Ø	4 mm	

BRAKES	Main master cylinder	mm	Ø 22,22			
	BRAKE PADS	Brand/model	TM / Mix 2		TM / Mix 2	
	BRAKE BALANCE	bar	30		26	
	Handbrake MC	mm			Ø	15mm

TRANS	Gearbox Ratio	Gears	1	2	3	4	5	Final drive
		EVO Ratio	12x29	17x31	17x25	22x26	21x20	12x54
	DIFFERENTIAL	Friction Faces	12 F	Ramps (°)	27/57	Preload	120 N.m	*Hot*

FLUID

Recommendations
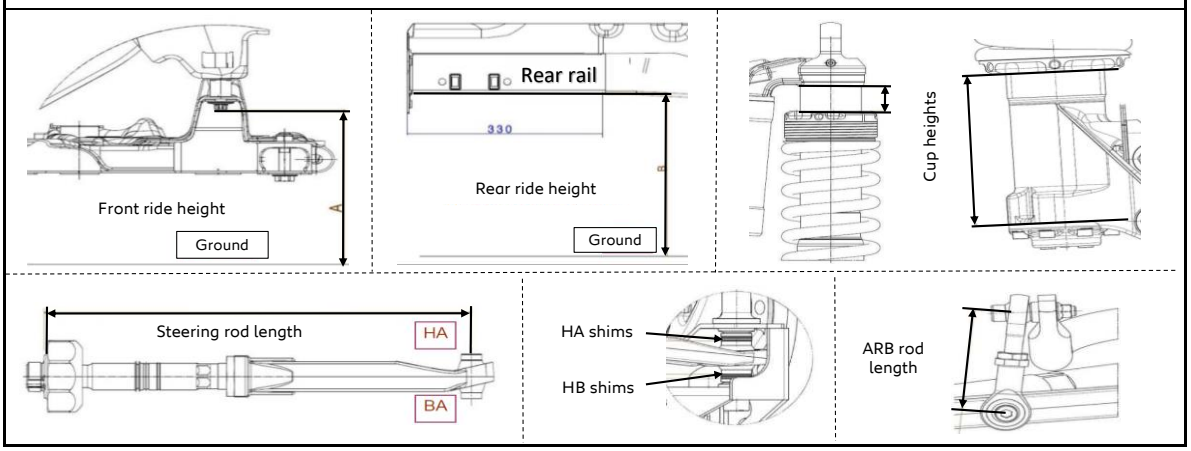
	Type	Reference	Volume
Engine Oil :	0 W 30	PS97727A10	3.5 L (+1.5 L radia)
GearBox Oil :	75 W 140	904895438A	1 L (+0.1 L radia)
Steering Fluid :	LDS	1615099680	2 L
Coolant :	PSA -35°C	1637756480	6.5 L
Brake / Clutch Fluid :	BREMBO HTC64	PS97633A10