UnNamed

A1 INSTALLATION DRAWING

IF THIS DOCUMENT IS PRINTED IN HARDCOPY, IT IS FOR INFORMATION USE ONLY AND THEREFORE IS NOT SUBJECT TO UPDATING CONTROLS. ALWAYS REFER TO SOLIDWORKS VIEWER FOR LATEST ISSUE

FIRST ANGLE PROJECTION

THIS DRAWING IS CONFIDENTIAL AND IS SUPPLIED ON THE EXPRESS CONDITION THAT IT SHALL NOT BE LOANED OR COPIED OR DISCLOSED TO ANY OTHER PERSON OR USED FOR ANY OTHER PURPOSE WITHOUT THE WRITTEN CONSENT OF AUTOMOTIVE PRODUCTS p.l.c.

© Automotive Products plc. 1998

AP Racing
Wheler Road
Coventry
CV3 4LB

Tel: +44 1203 639595
Fax: +44 1203 639559
e-mail: sales@apracing.co.uk
Web site: HTTP://www.apracing.com

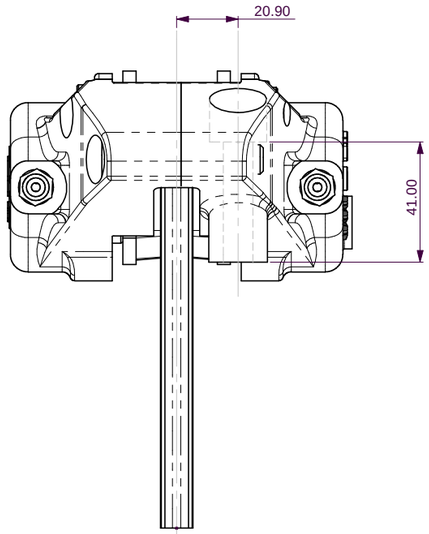

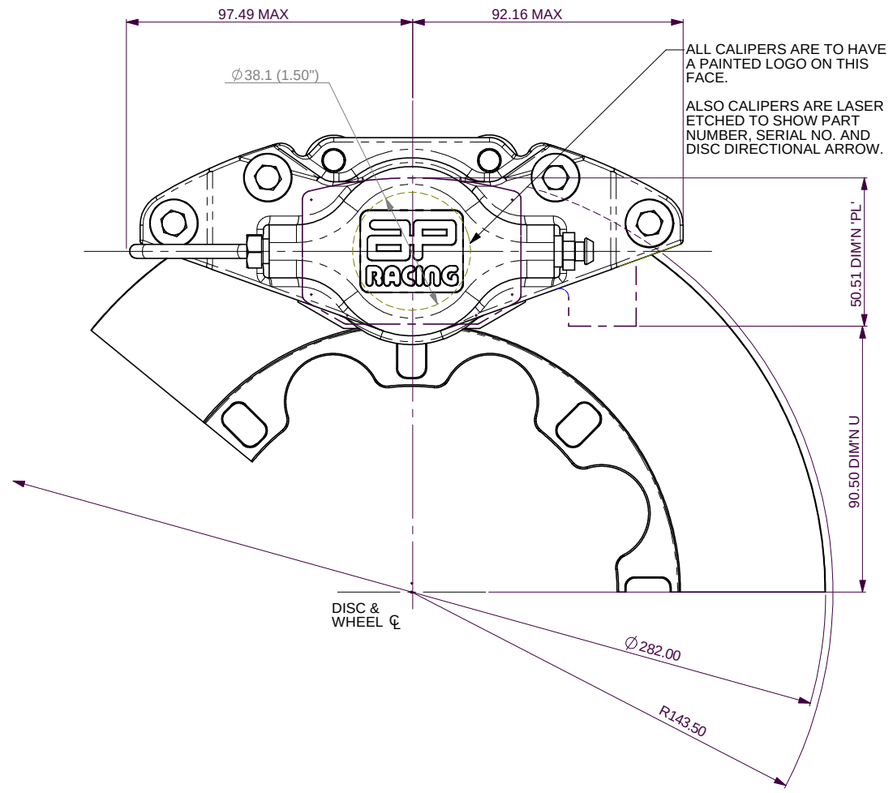

General Description

This is a 2-pot caliper designed to operate on a iron disc of up to dia 282mm x 12.7mm thick. All calipers are fitted with stainless steel bridge pipes as standard. High temperature / Low drag seals are fitted, and is of 'Seal In Bore' Type.

Typical Application

Formula Ford Cars

Technical & Installation Information

Piston Dia : 2 x 38.1mm
Total Piston Area :22.80cm^2
Piston Material – Aluminium Alloy
Body Material – Aluminium Alloy
All Hydraulic Threads M10 x 1.0

Key To Dimensions

Dimension 'PL'	Top of pad material to mounting boss face With pad sitting down on ledge.
Dimension 'C'	Disc centre line to mounting stud centre line.
Dimension 'U'	Wheel centre to caliper mounting boss face (disc diameter/2 – 'PL' Dimension).
Dimension 'H'	Mounting hole diameter.
Radius 'N'	Radius of disc pathway.
Effective rad.	Distance from wheel centre line to nominal piston centre line.

AP Racing technical section will be pleased to advise on the most suitable equipment for any application.

Should the piston be inadvertently removed, they should be wiped clean and be smeared with AP Racing brake fluid before replacement.

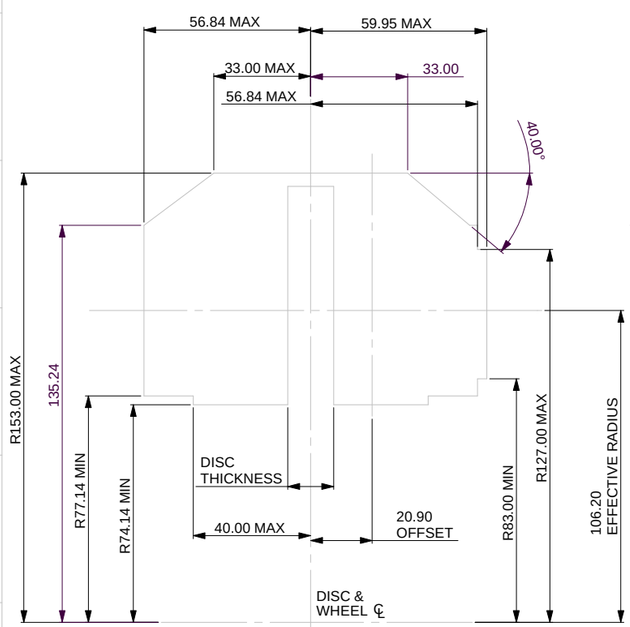

RADIAL PROFILE DRAWN TO SCALE FOR A ∅261.0

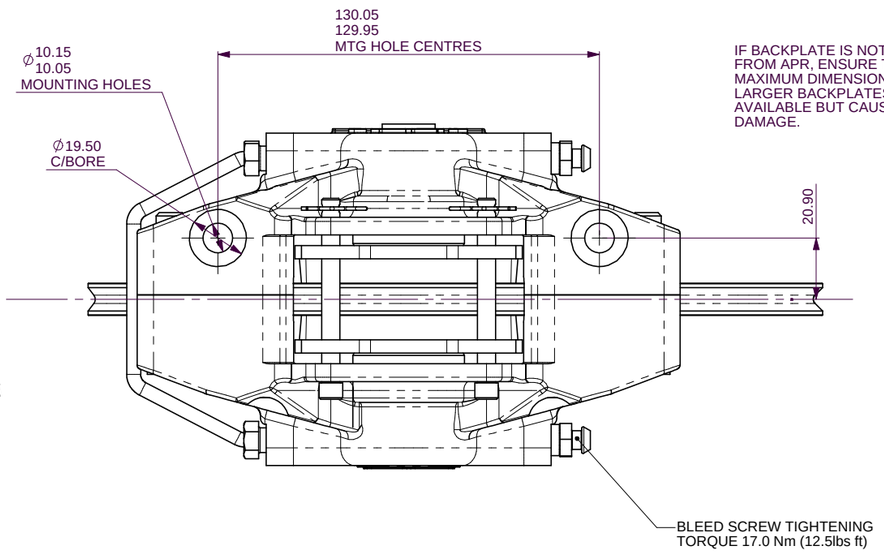

IF BACKPLATE IS NOT SUPPLIED FROM APR, ENSURE THE 77.50 MAXIMUM DIMENSION IS OBSERVERED. LARGER BACKPLATES ARE AVAILABLE BUT CAUSE CALIPER DAMAGE.

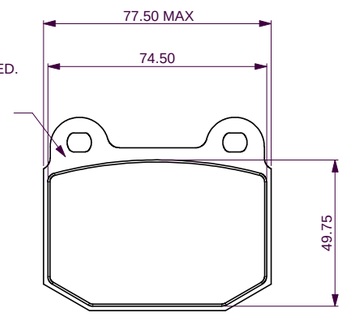

CP5119 PAD FAMILY

PAD AREA - 32.80cm²
PAD VOLUME - 29.78cm³

DISC & CALIPER MOUNTING TOLERANCES TO BE SUCH THAT DISC IS CENTRAL TO CALIPER TO WITHIN ±0.5.

CALIPER IDENTIFICATION CHART		
CP6121-2S0	RH	RIGHT HAND
CP6121-3S0	LH	LEFT HAND

Issue No.	Alterations: Date & No.	Particulars	Zone	Initials
1	19/10/00 B2879	FIRST ISSUE		SAT
2	06/11/02 RAC10898	DISC WAS Ø261 CALIPER DESIGNED FOR Ø282 DISC 'U' DIM'N WAS 80.69	9G 10H	SAT

SCALE 1:1	SHEET 1 OF 1
DRAWN	Stephen Thomas
APPROVED	
DERIVED FROM	cp6120-2/3SO

TITLE
2 x 38.1mm RADIAL MOUNTING CALIPER INSTALLATION

DRG NO. cp6121-1cd